MALE END VIEW

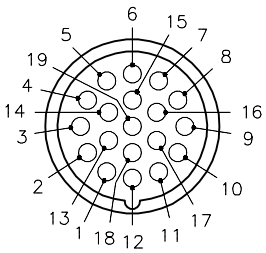

1 = WHITE/BLACK
2 = BLACK/WHITE
3 = WHITE/GREEN
4 = GREEN/WHITE
5 = WHITE/RED
6 = DRAIN
7 = RED/WHITE
8 = WHITE/ORANGE
9 = ORANGE/WHITE
10 = WHITE/BLUE
11 = BLUE/WHITE
12 = GREEN/YELLOW
13 = WHITE/BROWN
14 = BROWN/WHITE
15 = WHITE/YELLOW
16 = YELLOW/WHITE
17 = WHITE/VIOLET
18 = VIOLET/WHITE
19 = N/C

M23 connector

WIRING DIAGRAM

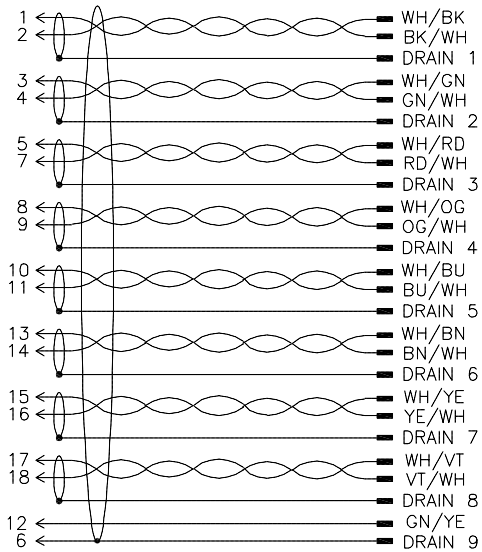

SPECIFICATIONS

CONTACT CARRIER MATERIAL	NYLON or PBT
CONTACT MATERIAL/PLATING	BRASS/GOLD
HOUSING/LOCKNUT MATERIAL/FINISH	STAINLESS STEEL/PASSIVATED
O-RING/GASKET MATERIAL	RUBBER (NBR or FPM)
RATED CURRENT [A]	2.0 A
RATED VOLTAGE [V]	150 V
OUTER JACKET MATERIAL/COLOR	PVC/PLUM
CONDUCTOR INSULATION MATERIAL	PVC
NUMBER OF CONDUCTORS [AWG]	16x22 AWG, 1x18 AWG GROUND
DRAIN/SHIELD	9x22 AWG DRAINS/ALUMINUM FOIL SHIELDED
CONDUCTOR ARRANGEMENT	8 SHIELDED TWISTED PAIR W/DRAIN, 1 GND, 1 DRAIN
TEMPERATURE RANGE	-40°C to +105°C (-40°F to +221°F)
PROTECTION CLASS	MEETS IEC IP67
CABLE RATINGS	UL: ITC/PLTC/AWM, 105C, 300V CSA: CMG/AWM, 105C, 300V
MAXIMUM PANEL THICKNESS	3.5 [0.138]

PANEL CUTOUT (TYPICAL)

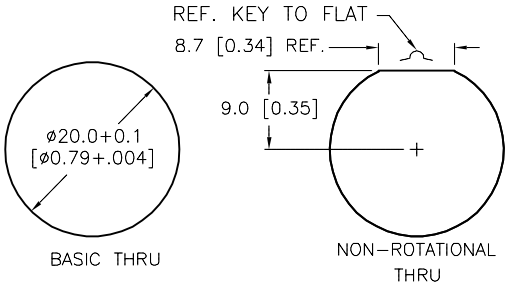

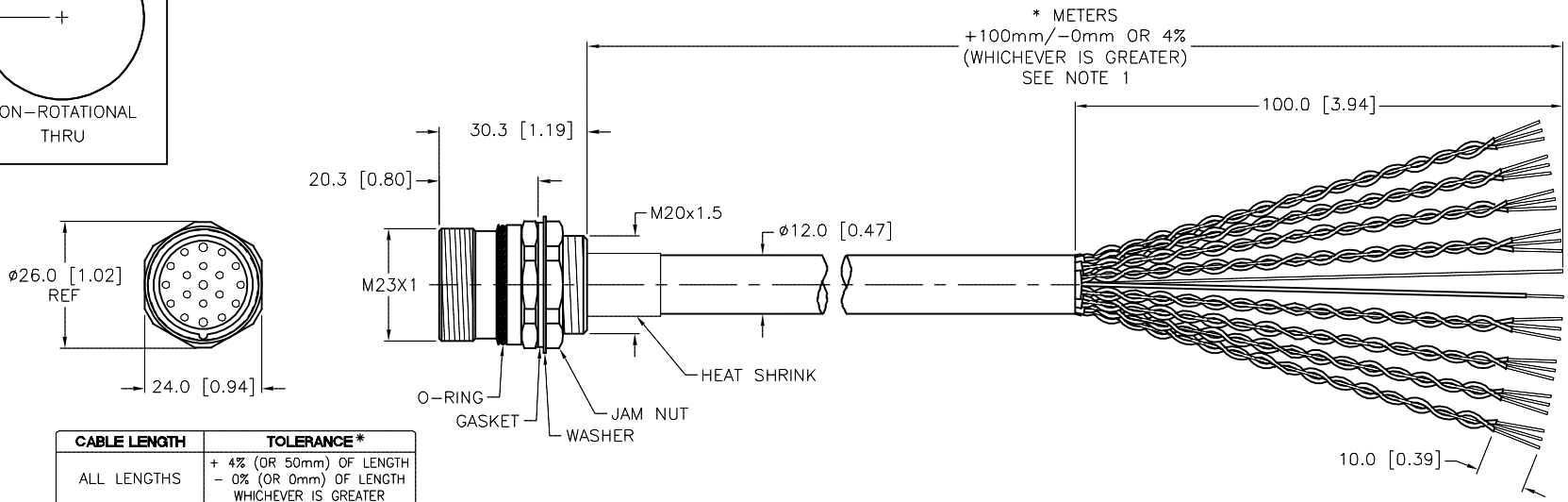

SOURCE DRAWING - FOR REFERENCE ONLY

CABLE LENGTH	TOLERANCE *
ALL LENGTHS	+ 4% (OR 50mm) OF LENGTH - 0% (OR 0mm) OF LENGTH WHICHEVER IS GREATER
STRIP LENGTH	**TOLERANCE ***
0-7mm	±0.5mm
8-29mm	±1.0mm
30-49mm	±2.0mm
50-69mm	±3.0mm
70-100mm	±4.0mm
OVER 100mm	±5.0mm
*** UNLESS OTHERWISE SPECIFIED**	

NOTES:

1. "*" INDICATES CABLE LENGTH IN METERS. CONTACT TURCK TO ORDER SPECIFIC LENGTHS.

REV	DESCRIPTION	BY	DATE	ECO NO.
F	UPDATE RATED CURRENT	NF	04/19/19	69449

RELATED DOCUMENTS
1.
2.
3.
4.

3RD ANGLE PROJECTION

THIS DRAWING IS CONFIDENTIAL AND THE PROPERTY OF TURCK INC. USE OF THIS DOCUMENT WITHOUT WRITTEN PERMISSION IS PROHIBITED.

TURCK

3000 CAMPUS DRIVE
MINNEAPOLIS, MN 55441
1-800-544-7769
(763) 553-7300
(763) 553-0708 fax
www.turck.us

MATERIAL: SEE SPECIFICATIONS

FINISH: SEE SPECIFICATIONS

ALL DIMENSIONS DISPLAYED ON THIS DRAWING ARE FOR REFERENCE ONLY

CONTACT TURCK FOR MORE INFORMATION

DRFT: RWC | DATE: 04/14/05
APVD: | SCALE: 1=1.5

UNIT OF MEASUREMENT
MILLIMETER [INCH]
DO NOT SCALE THIS DRAWING

DESCRIPTION: P-CSFLV 19-959-*

IDENTIFICATION NO.:

REV: F

FILE: 777007105 | SHEET 1 OF 1

Approved 04/22/2019, work order #190094 by T.S.